Automata Theory

THUSHARI SILVA, PHD

DEPARTMENT OF COMPUTATIONAL MATHEMATICS

FACULTY OF INFORMATION TECHNOLOGY

UNIVERSITY OF MORATUWA

Introduction to Finite Automata

LANGUAGES

DETERMINISTIC FINITE AUTOMATA

REPRESENTATIONS OF AUTOMATA

Alphabets

- An alphabet is any finite set of symbols.
- Examples: ASCII, Unicode, {0,1} (*binary alphabet*), {a,b,c}.

Strings

- The set of strings over an alphabet Σ is the set of lists, each element of which is a member of Σ.
  - Strings shown with no commas, e.g., abc.
- Σ* denotes this set of strings.
- ε stands for the *empty string* (string of length 0).

Example: Strings

- $\{0,1\}^* = \{\varepsilon, 0, 1, 00, 01, 10, 11, 000, 001, \ldots\}$
- Subtlety: 0 as a string, 0 as a symbol look the same.
- Context determines the type.

Languages

- A language is a subset of Σ^* for some alphabet Σ.
- Example: The set of strings of 0's and 1's with no two consecutive 1's.

L = {ε, 0, 1, 00, 01, 10, 000, 001, 010, 100, 101, 0000, 0001, 0010, 0100, 0101, 1000, 1001, 1010, . . . }

1 of length 0, 2 of length 1, 3 of length 2, 5 of length 3, 8 of length 4. How many of length 5?

Deterministic Finite Automata

A formalism for defining languages, consisting of:

1. A finite set of *states* (Q, typically).
2. An *input alphabet* (Σ, typically).
3. A *transition function* (δ, typically).
4. A *start state* (q_0, in Q, typically).
5. A set of *final states* ($F \subseteq Q$, typically).
   - "Final" and "accepting" are synonyms.

The Transition Function

- Takes two arguments: a state and an input symbol.

$\delta(q, a)$ = the state that the DFA goes to when it is in *state* q and *input* a is received.

Graph Representation of DFA's

- Nodes = states.
- Arcs represent transition function.
  - Arc from state p to state q labeled by all those input symbols that have transitions from p to q.
- Arrow labeled "Start" to the start state.
- Final states indicated by double circles.

Example: Graph of a DFA

Accepts all strings without two consecutive 1's.

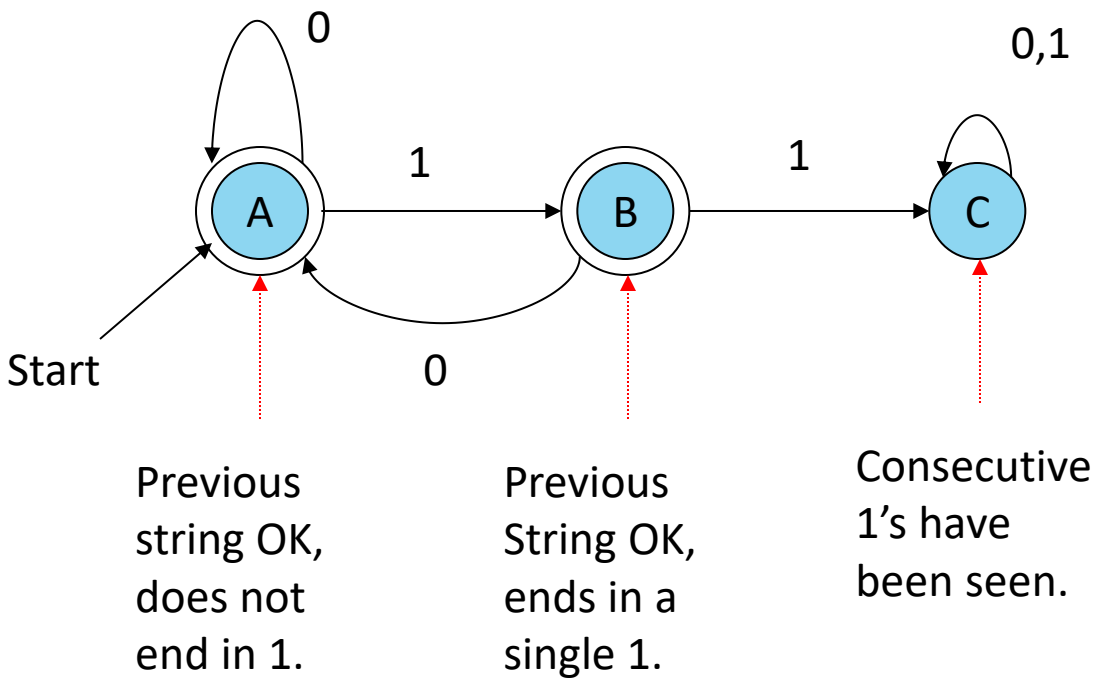

Alternative Representation: Transition Table

Final states starred

Arrow for start state

	0	1
* A	A	B
* B	A	C
C	C	C

Columns = input symbols

Rows = states

Extended Transition Function

- We describe the effect of a string of inputs on a DFA by extending δ to a state and a string.

Induction on length of string.

Basis: $\delta(q, \varepsilon) = q$

Induction: $\delta(q,wa) = \delta(\delta(q,w),a)$

- w is a string; a is an input symbol.

Extended δ: Intuition

Convention:

- … w, x, y, z are strings.
- a, b, c,… are single symbols.

Extended δ is computed for state q and inputs $a_1a_2\ldots a_n$ by following a path in the transition graph, starting at q and selecting the arcs with labels $a_1, a_2,\ldots,a_n$ in turn.

Example: Extended Delta

	0	1
A	A	B
B	A	C
C	C	C

$$\delta(B,011) = \delta(\delta(B,01),1) = \delta(\delta(\delta(B,0),1),1) =$$

$$\delta(\delta(A,1),1) = \delta(B,1) = C$$

Delta-hat

- In book, the extended δ has a “hat” to distinguish it from δ itself.
- Not needed, because both agree when the string is a single symbol.

$$\delta(q, a) = \hat{\delta}(\delta(q, \varepsilon), a) = \hat{\delta}(q, a)$$

Extended deltas

Language of a DFA

- Automata of all kinds define languages.
- If A is an automaton, L(A) is its language.
- For a DFA A, L(A) is the set of strings labeling paths from the start state to a final state.
- Formally: L(A) = the set of strings w such that $\delta(q0, w)$ is in F.

Example: String in a Language

String 101 is in the language of the DFA below.
Start at A.

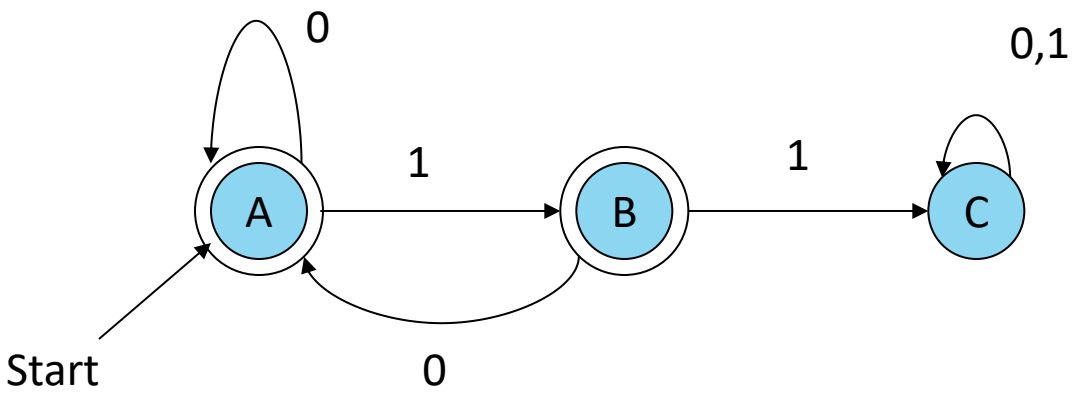

Example: String in a Language

String 101 is in the language of the DFA below.

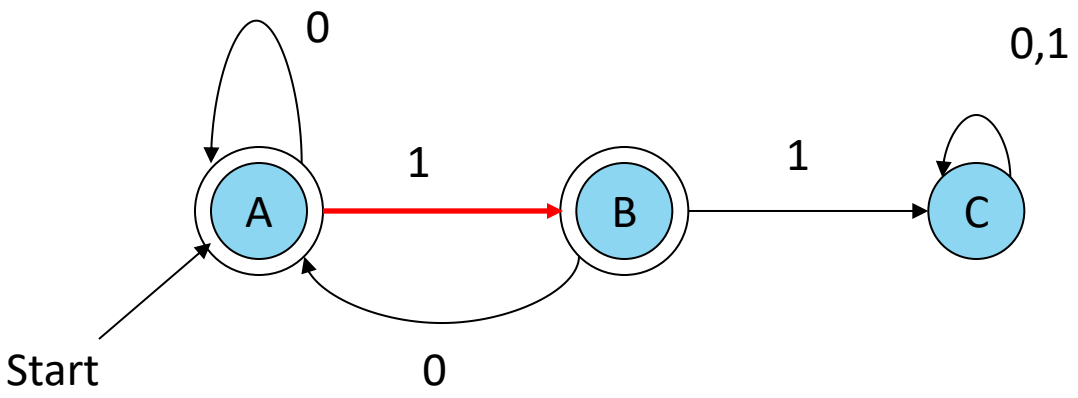

Follow arc labeled 1.

Example: String in a Language

String 101 is in the language of the DFA below.

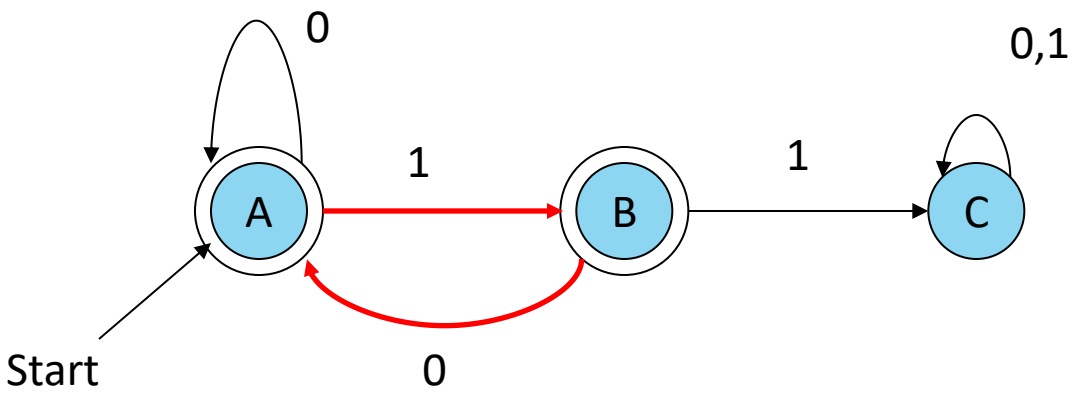

Then arc labeled 0 from current state B.

Example: String in a Language

String 101 is in the language of the DFA below.

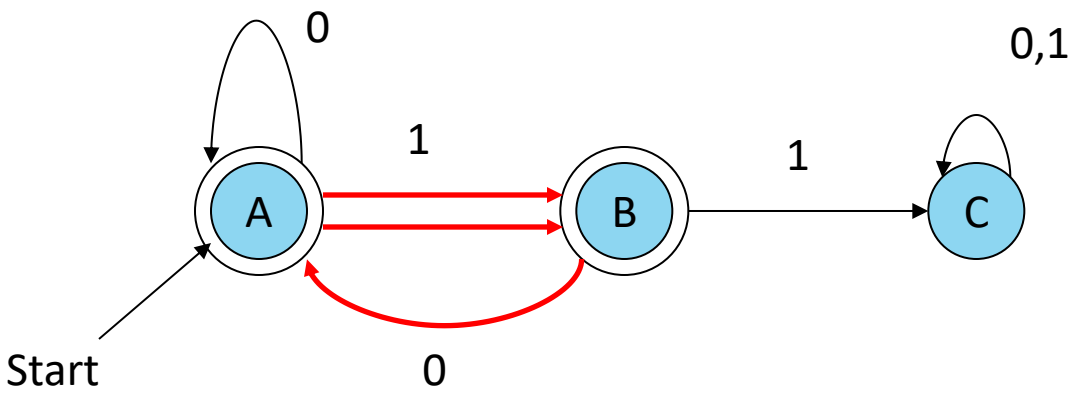

Finally arc labeled 1 from current state A. Result is an accepting state, so 101 is in the language.

Example – Concluded

The language of our example DFA is:

{w | w is in {0,1}* and w does not have two consecutive 1's}

Such that…

These conditions about w are true.

Read a *set former* as "The set of strings w…

Regular Languages

- A language L is *regular* if it is the language accepted by some DFA.
  - Note: the DFA must accept only the strings in L, no others.
- Some languages are not regular.
  - Intuitively, regular languages "cannot count" to arbitrarily high integers.

Example: A Nonregular Language

$L_1 = \{0^n 1^n \mid n \geq 1\}$

- Note: a^i is conventional for i a's.
  - Thus, $0^4 = 0000$, e.g.
- Read: "The set of strings consisting of n 0's followed by n 1's, such that n is at least 1".
- Thus, $L_1 = \{01, 0011, 000111, \ldots\}$

Another Example

L_2 = {w | w in {(,)}* and w is *balanced* }

- Note: alphabet consists of the parenthesis symbols '(' and ')'.
- Balanced parentheses are those that can appear in an arithmetic expression.
  - E.g.: (), ()(), (()), (()()),…

But Many Languages are Regular

- Regular Languages can be described in many ways, e.g., regular expressions.
- They appear in many contexts and have many useful properties.
- Example: the strings that represent floating point numbers in your favorite language is a regular language.

Example: A Regular Language

L_3 = { w | w in {0,1}* and w, viewed as a binary integer is divisible by 23}

- The DFA:
  - 23 states, named 0, 1,…,22.
  - Correspond to the 23 remainders of an integer divided by 23.
  - Start and only final state is 0.

Transitions of the DFA for L_3

- If string w represents integer i, then assume $\delta(0, w) = i\%23$.
- Then w0 represents integer 2i, so we want $\delta(i\%23, 0) = (2i)\%23$.
- Similarly: w1 represents 2i+1, so we want $\delta(i\%23, 1) = (2i+1)\%23$.
- Example: $\delta(15,0) = 30\%23 = 7$; $\delta(11,1) = 23\%23 = 0$.

Key idea: design a DFA by figuring out what each state needs to remember about the past.

Another Example

L_4 = { w | w in {0,1}* and w, viewed as the reverse of a binary integer is divisible by 23}

- Example: 01110100 is in L_4, because its reverse, 00101110 is 46 in binary.
- Hard to construct the DFA.
- But a theorem says the reverse of a regular language is also regular.

Exercise

Draw a DFA that accepts strings over {0,1}* that contain substrings 101

Example

Draw a DFA for the language accepting strings starting with ‘a’ over input alphabets ∑ = {a, b}

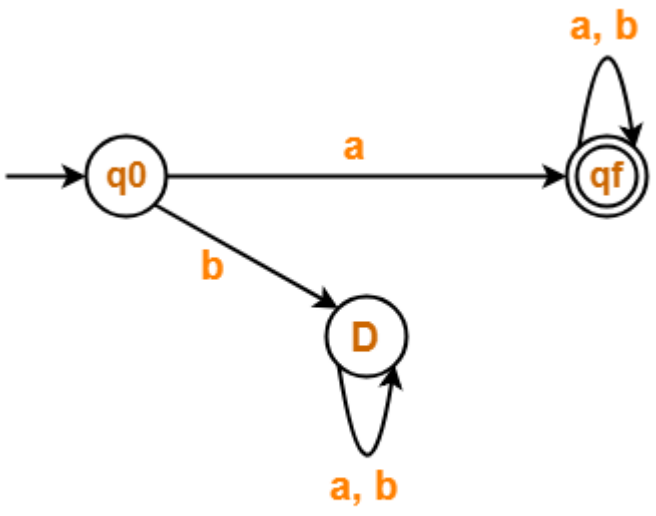

DFA

Example

Draw a DFA for the language accepting strings starting with ‘101’ over input alphabets ∑ = {0, 1

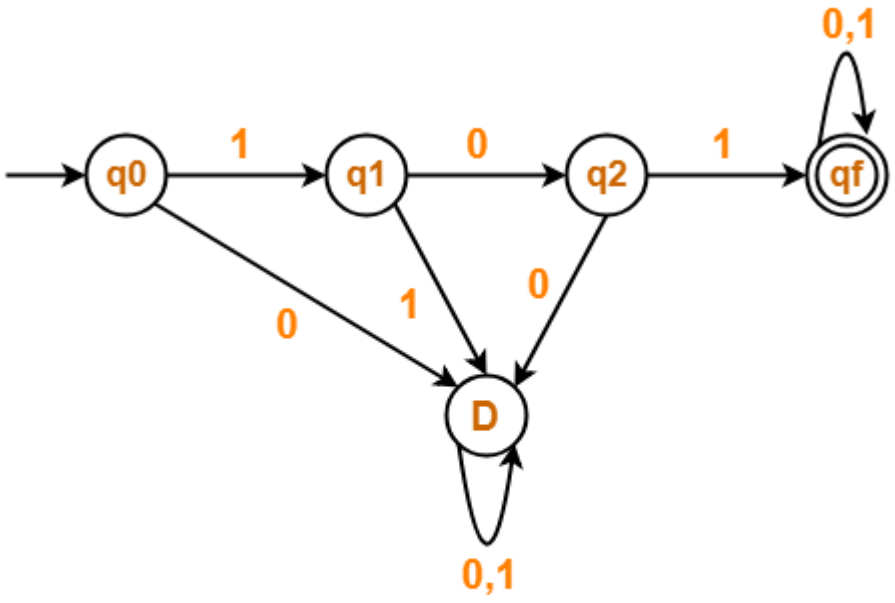

DFA

Example

Design Deterministic Finite Automata's(DFA) to recognize the following languages over the alphabet {0,1}

- The Set of all strings ending in 00.
- The Set of all strings with three consecutive 0's.
- The Set of strings with 011 as a substring.